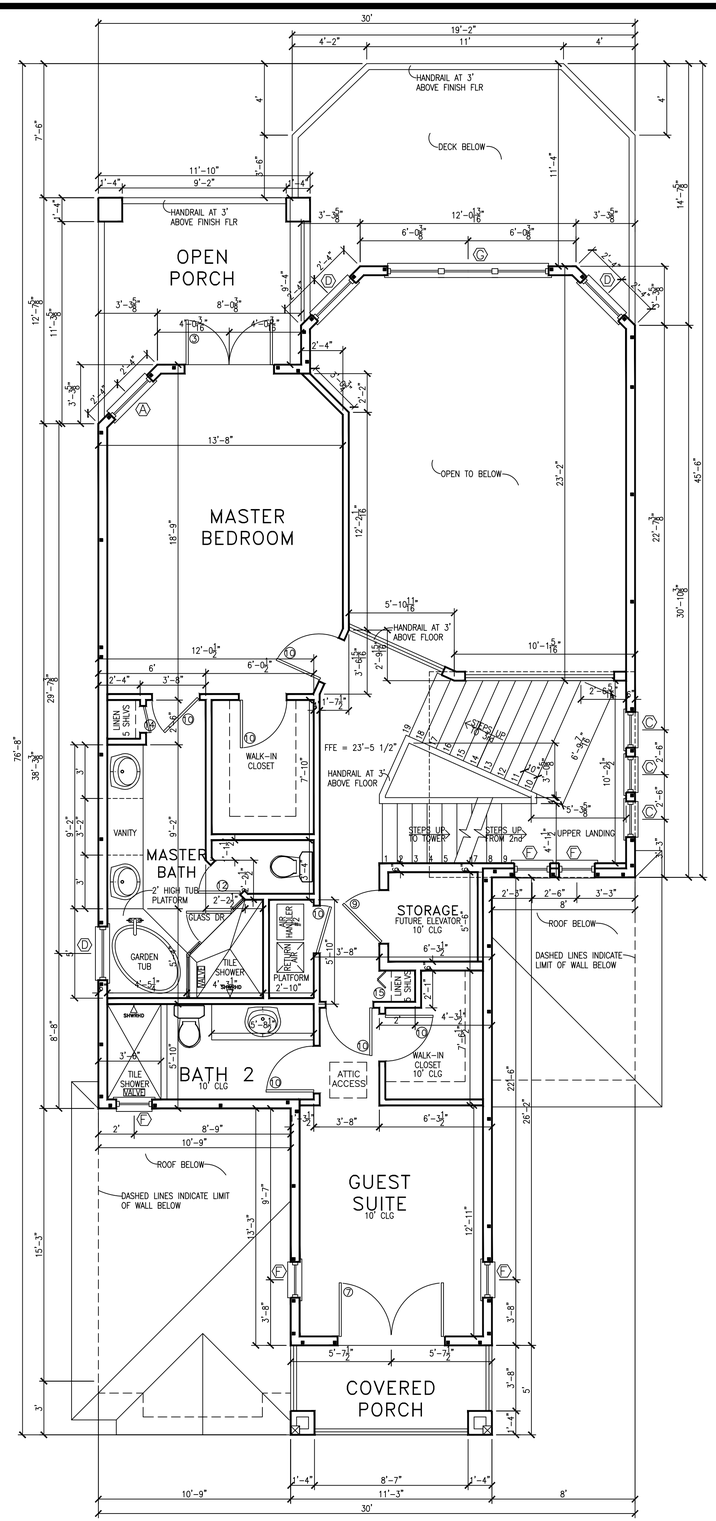

THIRD FLOOR PLAN
SCALE 1/4" = 1'-0"

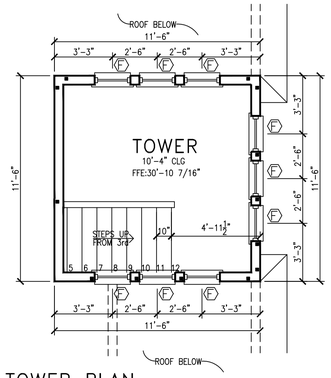

TOWER PLAN
SCALE 1/4" = 1'-0"

COPYRIGHT NOTICE
THE USE OF THESE DRAWINGS AND SPECIFICATIONS SHALL BE RESTRICTED TO THE ORIGINAL SITE FOR WHICH THEY WERE PREPARED AND PUBLICATION THEREOF IS EXPRESSLY LIMITED TO SUCH USE. REUSE, REPRODUCTION, OR PUBLICATION BY ANY METHOD, IN WHOLE OR IN PART, IS PROHIBITED. TITLE TO THE DRAWINGS AND SPECIFICATIONS REMAIN IN THE DESIGNER WITHOUT PREJUDICE. VISUAL CONTACT WITH THOSE DRAWINGS AND SPECIFICATIONS SHALL CONSTITUTE PRIMA FACIE EVIDENCE OF THE ACCEPTANCE OF THESE RESTRICTIONS.

DESIGNED BY
Gold Coast Custom Homes

Beachside Design Group, Inc.
310 South Oceanshore Blvd, Flagler Beach, FL
By Appointment Only - (386)439-5700
Dale Schmutz, President

NOTE:
THE CONTRACTOR IS RESPONSIBLE TO CHECK THE PLANS AND IS TO NOTIFY THE DESIGNER OF ANY ERRORS OR OMMISSIONS PRIOR TO START OF CONSTRUCTION.

Gold Coast CUSTOM HOMES

Mummert Residence
502 Cinnamon Beach Lane
Palm Coast, FL 32137

Mirko Restovic
FLA PE #74186
96 Benjamin Drive
Ormond Beach, FL
32176

THIRD FLOOR PLAN

SHEET
2 OF 7

RELEASED FOR CONSTRUCTION

GO VOLS!!!!!!!
FILENAME: GOLDCOAST2013/MUMMERT
PRELIM1:3/25/2013
TOTRUSS:3/29/2013
RFC:4/16/2013
RFC#2:5/15/2013
ADDEDELECTNOTE:7/18/2013
REVISED COVER TO FBC:7/26/2013
REV#2:9/16/2013
REV#3:9/19/2013
REV#4:10/10/2013